POWER SUPPLY

MIDTERM PROJECT

prepared by:

Gyro A. Madrona

Electronics Engineer

GRADING SYSTEM

FINAL GRADE

30%

PRELIM

30%

MIDTERM

40%

ENDTERM

100%

LABORATORY

PENALTY

0

ABSENT

3

45-min LATE

7 max

15-min LATE

TOPIC OUTLINE

Power Control Setup

Power Supply

POWER CONTROL

SCHEMATIC AND WIRING DIAGRAM

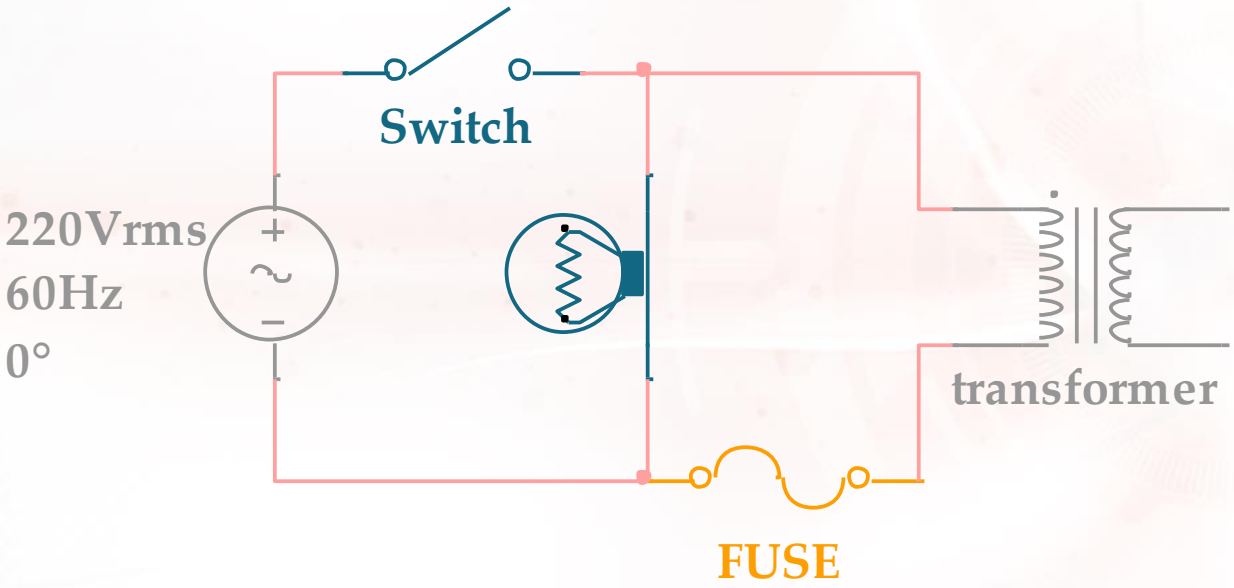

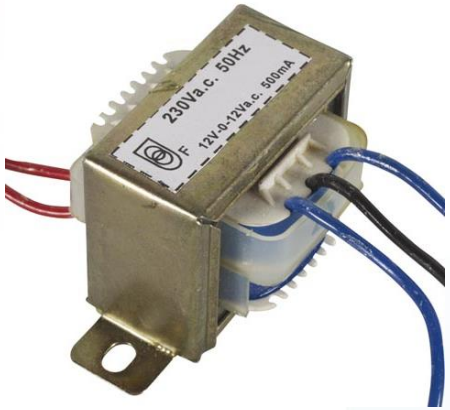

CHASSIS LAYOUT

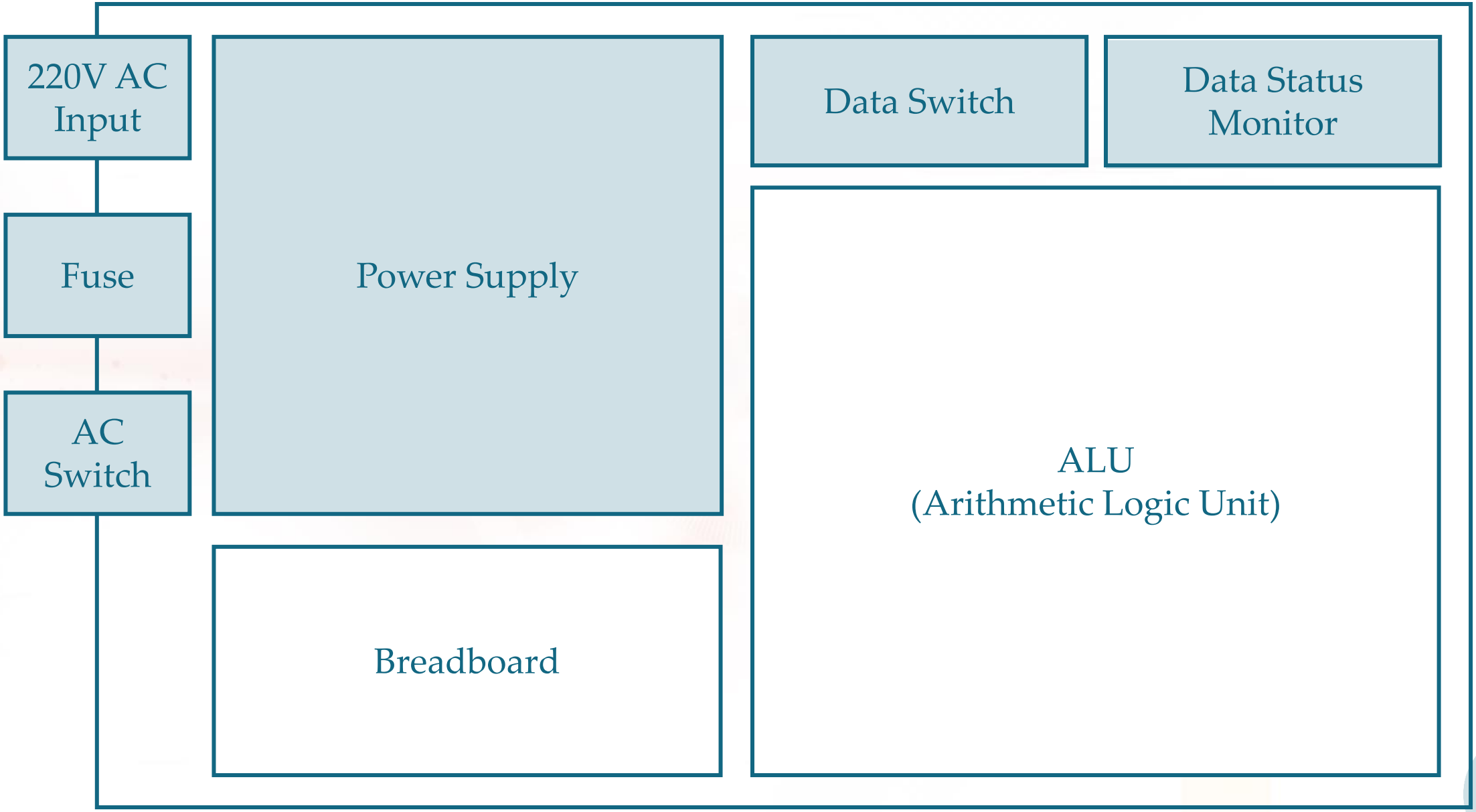

POWER SUPPLY

SCHEMATIC DIAGRAM

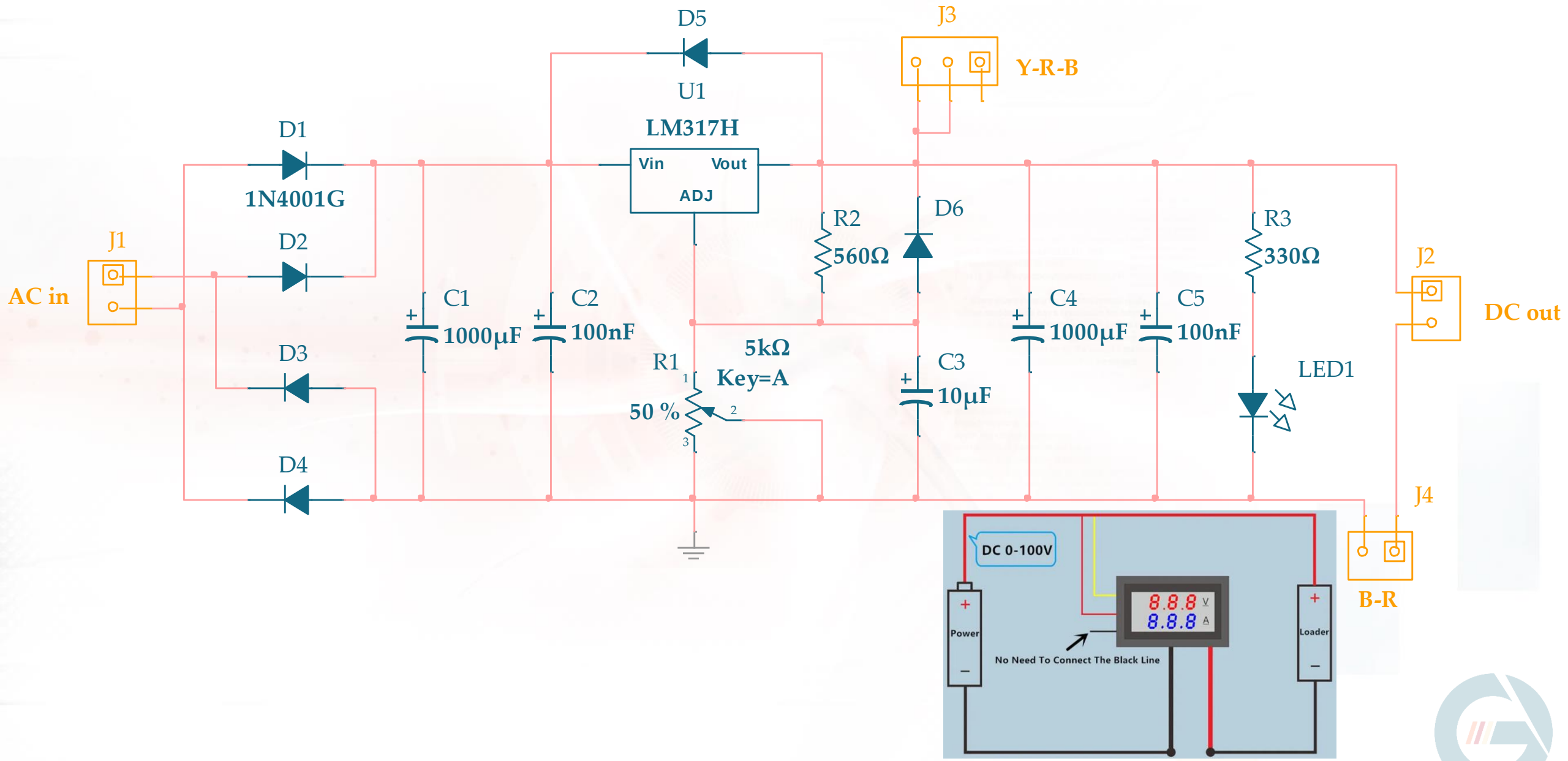

FOOTPRINT

Component	Footprint
Connector	HDR1X2, HDR1X3
Rectifier Diode	1N4001G
1000 uF	CAPPR750-1600X3150
100 nF	CAPR500-700X300X600
10 uF	CAPPR350-800X1150
Carbon Resistor	RES1300-700X250
Potentiometer	POTI4M
LM317	TO220

PCB LAYOUT

2x3 in

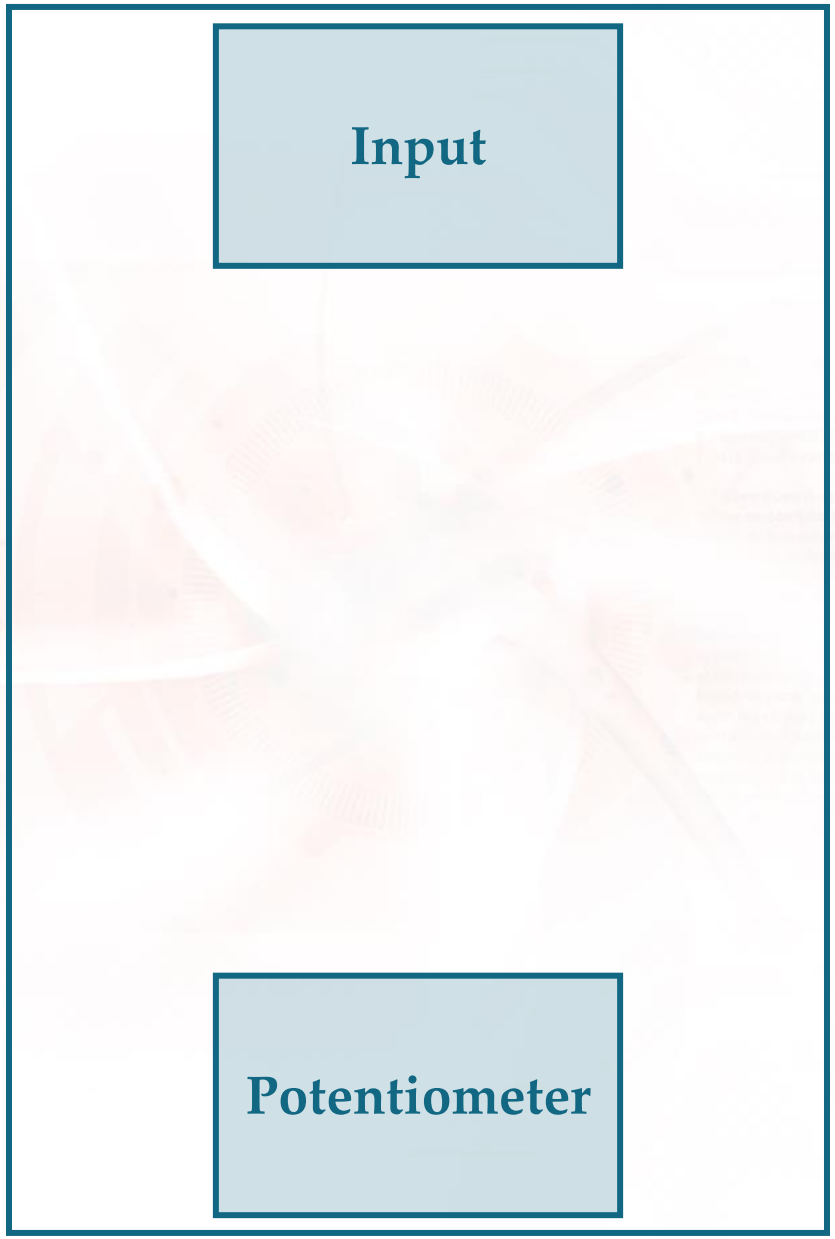

LABORATORY